Huntkey航嘉

用户手册

USB-C 转 USB-C 数据线

产品连接示意　充电器 --> 手机、平板、电脑

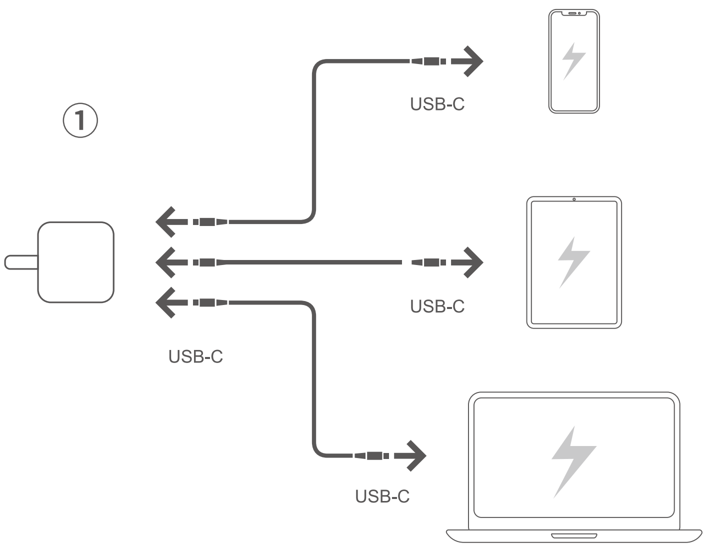

规格参数

输入接口	USB-C
输出接口	USB-C
额定电流	3A Max

包装清单

USB-C转USB-C数据线×1

用户手册×1

产品中有害物质的名称及含量

部件名称	有害物质									
	铅 (Pb)	汞 (Hg)	镉 (Cd)	六价铬 (Cr VI)	多溴联苯（PBB）	多溴二苯醚（PBDE）	邻苯二甲酸二（2-乙基）己酯（DEHP）	邻苯二甲酸丁基苄酯（BBP）	邻苯二甲酸二正丁酯 (DBP)	邻苯二甲酸二异丁酯 (DIBP)
电路板	×	○	○	○	○	○	○	○	○	○
附　件	×	○	○	○	○	○	○	○	○	○

注1：○：表示该有害物质在该部件所有均质材料中的含量均不超出电器电子产品有害物质限制使用国家标准要求。

×：表示该有害物质至少在该部件的某一均质材料中的含量超出电器电子产品有害物质限制使用国家标准要求。

注2：以上未列出的部件，表明其有害物质含量均不超出电器电子产品有害物质限制使用国家标准要求。

技术说明：PCBA中的二极管、三极管中使用的高温焊锡含铅，符合达标管理目录限用物质应用例外清单8.1条款。

PCBA中的贴片电阻、二极管等使用的玻璃含铅，符合达标管理目录限用物质应用例外清单8.3.1条款。

保修卡

尊敬的用户，感谢您使用Huntkey航嘉的产品。为了能更好地为您服务，在购买产品后，请您阅读、填写并妥善保存此保修卡。

用户姓名 ________________________________
用户地址/邮编 ________________________________
联系电话 ________________________________
产品型号 ________________________________
产品序列号 ________________________________
购买日期 ________________________________
发票号码 ________________________________
销售单位名称 ________________________________

销售单位地址/电话 ____________________

保修说明

消费者通过合法渠道购买的Huntkey航嘉产品，自购机之日起十二个月内如果出现非人为原因造成的故障，可以享受产品保修服务。

为保证您的合法权益，请注意以下事项：
（1）保修卡应由用户妥善保管，遗失不补，涂改无效。
（2）本产品若发生非人为原因造成的故障，用户可凭保修卡和购机凭证，在保修期内到指定的维修点进行免费维修。

以下不属于保修服务范围
（1）产品超过保修有效期；
（2）无有效购机凭证，也无法证明所购产品在保修有效期内；
（3）保修卡型号与产品型号不符；
（4）无保修卡或者保修卡被涂改过；
（5）人为因素造成的损坏；
（6）非授权的维修、暴力操作、拆解、改装、挤压、进液、腐蚀；
（7）因水灾、火灾、雷击等不可抗力造成的损坏；

如需在保修服务失效的情况下提供维修服务，航嘉将按零部件和人工成本计算合适的维修费用，并向用户提出维修报价，在征得用户的同意并支付费用后为用户的产品提供维修服务。

合格证

检验员: 02
出厂日期: ____________________

CE RoHS

This device complies with Part 15 of the FCC Rules.
Operation is subject to the following two conditions:
(1)This device may not cause harmful interference, and
(2)This device must accept any interference received, including interference that may cause undesired operation.

执行标准: GB 4943.1-2022
品牌：Huntkey航嘉
制造商：深圳市航嘉创源科技有限公司
地址：深圳市龙岗区坂田街道雪象村航嘉工业园2#厂房3楼C室
警告：适用于资讯类产品　中国制造

Huntkey

User Manual

USB-C to USB-C Cable

Diagram

Charger --> Phone、Tablet、USB-C Laptop

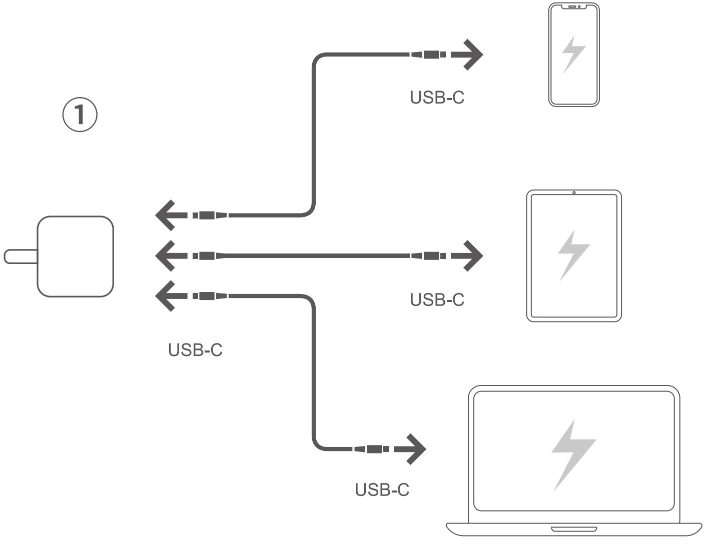

Specification

Input Interface	USB-C
Output Interface	USB-C
Rated current	3A Max

Package Contains

USB-C to USB-C Cable×1

User Manual×1

The Name and Content of Hazardous Substances in the Product

Name of Parts	Hazardous Substances									
	Pb	Hg	Cd	Cr VI	PBB	PBDE	DEHP	BBP	DBP	DIBP
PCB	×	○	○	○	○	○	○	○	○	○
Attachment	×	○	○	○	○	○	○	○	○	○

This table is compiled in accordance with SJ/T 11364.

○：Indicates that the content of the hazardous substance in all homogeneous materials of the part is below the limit requirements specified in GB/T 26572.

×：Indicates that the content of the hazardous substance in at least one homogeneous material of the part exceeds the limit requirements specified in GB/T 26572.。

Warranty Card

Dear users, thank you for using Huntkey's products. In order to get a better service, please read, fill out and properly keep this warranty card after purchasing the product.

User's Name ____________________
Address/Zip Code ____________________
Phone Number ____________________
Product Model ____________________
Product Serial Number ____________________
Date of Purchase ____________________
Invoice Number ____________________
Marketing Unit ____________________
Add/Phone of Marketing Unit ____________________

Warranty Description

If there is a failure caused by non-man-made reasons, consumers who legally purchased Huntkey products can enjoy product warranty services within 12 months from the date of purchase.

In order to ensure your legitimate rights, please keep in mind the following:

（1）The warranty card should be properly kept by the user. No replacement if lost. Invalid if altered.

（2）If there is a failure caused by non-man-made reasons, the user can have free maintenance at the designated maintenance point with the warranty card and the purchase certificate during the warranty period.

The following are not covered by warranty services:

（1）The product exceeds the warranty period;

（2）No valid invoice,and unable to prove that the purchased product is within the warranty period;

（3）The model of warranty card does not match the product model;

（4）No warranty card or the warranty card has been altered;

（5）Damage caused by human factors;

（6）Unauthorized maintenance, violent operation, disassembly, modification, extrusion, liquid infusion and corrosion;

（7）Damage caused by force majeure such as floods, fires, lightning strikes, etc.

Huntkey will calculate proper maintenance costs based on parts and labor costs if users need repair services in the case of warranty services failure. We will give repair services after obtaining the user's consent and pay the fee.

This device complies with Part 15 of the FCC Rules.
Operation is subject to the following two conditions:
(1)This device may not cause harmful interference, and
(2)This device must accept any interference received,
including interference that may cause undesired operation.

Shenzhen Huntkey Electric Co., Ltd.
C Room,3F,2# Factory building, Huntkey Industrial Park,
Xue-Xiang Village, Banxue Road, Bantian, Shenzhen,
Guangdong,518129, PEOPLE'S REPUBLIC OF CHINA
☎ 400-678-8388 HuntkeyGlobal
www.huntkey.com
Made in China